ISSUE CHANGE
ISSUE B: C/R 24510 R1 WAS 10k. NJA 27-2-96

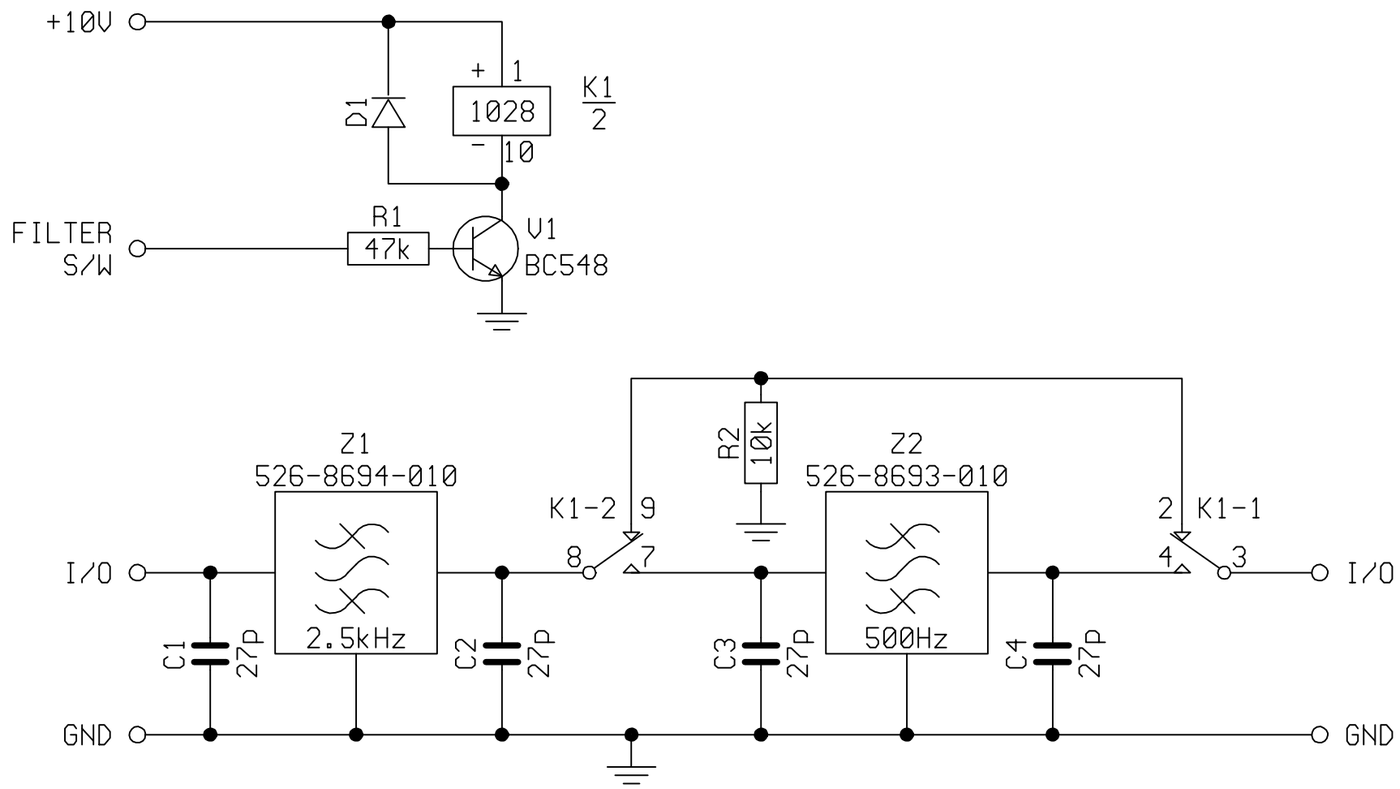

PCB 07-01738
ASSY 08-05259-001

FILE NAME
04\3104_1.SCH

CODAN			SCALE	© CODAN PTY. LTD, A.C.N. 007 590 605, 1996 TITLE
	DRN	C G	DATE 30-1-96	500Hz FILTER SWITCH
MATERIAL	CHKD	NJA	15-2-96	
	APPD	NJA	02-07-97	A3 DRAWING/DOC.NO 04-03104
FINISH	TOLERANCES UNLESS OTHERWISE STATED 2 PLACES DEC. ± 1 PLACE DEC. ± ANGULAR ±			ISS A B 1 SHT 1 OF 1